Haier Biomedical
Intelligent Protection of Life Science

# Personal -86 °C ULT Freezer




DW-86L100J

**Typical Installation and Application**

Suitable for clinical, medical, scientific research, quarantine and other departments to store items under low temperature conditions. Applicable for universities, hospitals, disease prevention and control centres, blood stations, scientific research institutes, electronics and chemical enterprise laboratories and biomedical engineering research institutes. For storage of biological products and sample biological samples such as red and white blood cells, viruses, bone and bacteria. Also used for electronic devices and other materials used for cryogenic tests.

**Energy Efficient, Safe and Reliable**
HighefficiencyHCrefrigerationsystem, optimised for energy efficiency delivering a power consumption figure of just 5.5kW/24hr.

**Personal ULT Storage**
810mmcabinetheight makes it easy to place on or under bench, saving storage space. Stackable design.

**Ergonomic design**
Ergonomichandledesign ensures easy one-hand door opening.

**Low noise**
Optimizednoise reduction cabinet and system design, emits sound level of only 46.8dB.


## Qingdao Haier Biomedical Co.,Ltd.

Brand Building, Haier Industrial Park, No.1Haier Road, Qingdao, 266101, P.R.China
Tel: +86-0532-88935955
Website: www.haiermedical.com

# Product Features

Haier -86°C Personal ULT Freezer
Energy-efficient HC refrigeration design. Secure and reliable. Intelligent Control.



Optional IoT Module
Real time monitoring of cabinet temperature, temperature setting, high and low temperature alarm value, temperature curve, alarm log and event log.



·User-settable parameters such as set point and alarms.
·Real-time cabinet temperature display, alarm information, power supply and compressor start/stop state.
·Standard USB port capable of storing >15 years of operating data for compliance.

VIP insulation and multilayered sealing design

70mm insulating layer with 25mm VIP and 4 layers of gasket improves energy efficiency and reduces heat loss to deliver excellent warm up times in event of power failure.



Filter is easy to remove and clean without the need for tools.

Ergonomic design for easy door opening and closing. Lockable and equipped with 4 keys as standard with the ability to add a padlock for extra security when required.

4 casters + 2-foot locks, easy to move, lock and level.



Double stainless-steel inner doors to prevent cooling loss when opening the outer door, easy to clean.

## Microprocessor control system

· Microcomputer electronic thermostat, LED temperature display, display precision 0.1℃, adjustable cabinet temperature set point -40℃~-86℃.
· Cabinet temperature/voltage/ambient temperature checking are available.
· Multiple alarm functions: high temperature alarm, low temperature alarm, sensor fault alarm, power failure alarm, low battery power alarm, open door alarm and high ambient temperature alert.
· Sound and light alarm mode, attachable to remote alarm interface.
· Battery backup alarm function operates continuously for >24hr in the event of a power outage.
· Standard configuration: RS485 port and USB interface.
· Standard 5V power supply available for test equipment.
· Optional IoT module.



## Superior thermal insulation performance

70mm super thick insulation layer design, aviation vacuum insulation material VIP, thickness of 25 mm or more, 4 layers of silicone seal, superior thermal insulation and energy saving effect.

## Porthole

Portholes as standard, allows for independent testing of cabinet temperature.



## Security lock

Standard door lock and padlock to ensure sample security and prevent unauthorised access.

## USB data storage

Capable of storing more than 15 years of data.

## Typical Performance Characteristics in 25℃ Ambient: DW-86L100J

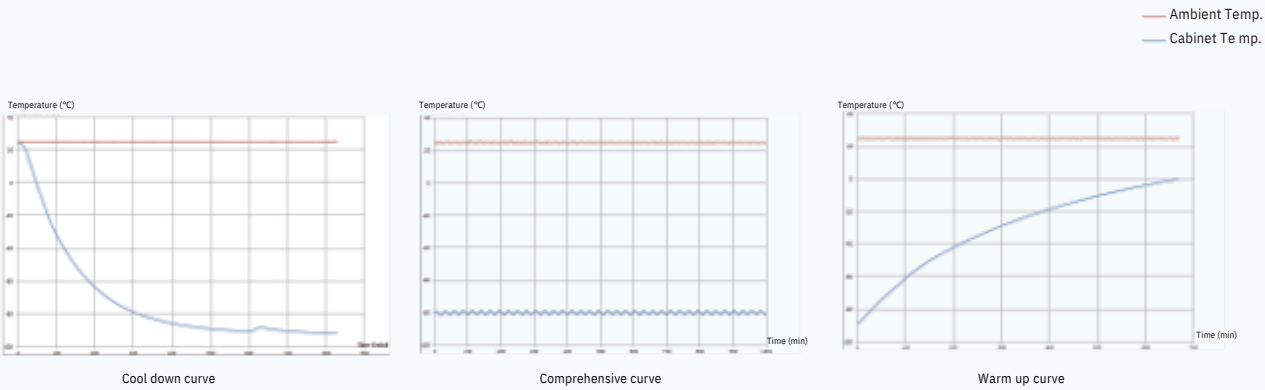


Cool down curve

Comprehensive curve

Warm up curve

| Cooling Time(ambient temperature reducing to -80℃) | Temperature Uniformity | Time for inside temperature to rise back from-80℃ to -50℃ naturally at ambient 25℃ |
|---|---|---|
| 310min | ±4℃ | 120min |

## Product Dimension Drawing

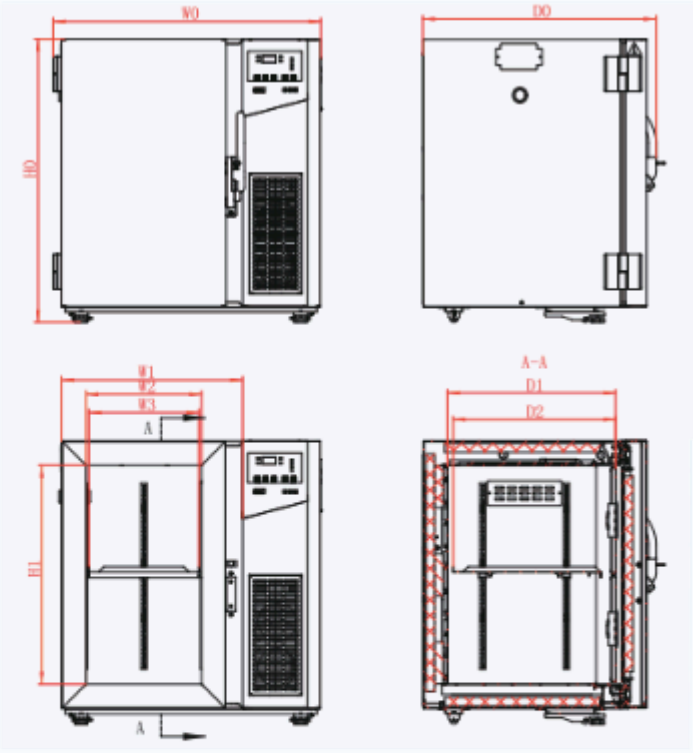


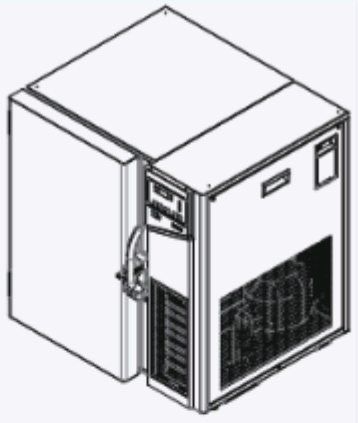

Parameters description:
W0: Overall width
W1: External width
W2: Internal width
W3: Shelf width (efficient width for cryogenic vial storage) D0: Overall depth
D1: Internal depth
D2: Shelf depth (efficient depth for cryogenic vial storage) H0: Overall height
H1: Internal height

| CODE / MODEL | W0 | W1 | W2 | W3 | D0 | D1 | D2 | H0 | H1 |
|---|---|---|---|---|---|---|---|---|---|
| DW-86L100J | 770mm | 520mm | 330mm | 314mm | 660m | 481mm | 465mm | 810mm | 630mm |

# Specifications

| Model | | | DW-86L100J |
|---|---|---|---|
| Technical Data | Cabinet Type | | Upright |
| | Climate Class | | N |
| | Cooling Type | | Air cooling |
| | Defrost Mode | | Manual |
| | Refrigerant | | HC |
| | Noise((dB(A)) | | 46.8 |
| Performance | | | |
| Control | Controller | | Microprocessor |
| | Display | | LED |
| | Power Supply(V/HZ) | | 220~240/50 |
| Electrical Data | | | |
| Dimensions | Weight(approx) | (kg) | |
| | | (lbs) | 238/291 |
| | Interior Dimension(W*D*H) | (mm) | 330×481×630 |
| | | (in) | 13×19×25 |
| | Exterior Dimension(W*D*H) | (mm) | 770×660×810 |
| | | (in) | 30×26×32 |
| | Packing | (mm) | |
| | | (in) | 830x710x970 |
| | Dimension(W*D*H) | | 33x28x38.5 |
| Functions | | | |
| Accessories | Door Ajar | | Y |
| | Caster | | Y |
| | Foot | | 4 |
| | Porthole | | 1 |
| | Shelves | | 1 |
| | USB Interface | | Y |
| | 5V Power Supply Port | | Y |
| | RS485 Port | | Y |
| Other | | | |